Pre-Installation Application Guide

Benchmark® and Benchmark Platinum Electrical Power Guide

Benchmark Models 750 through 6000

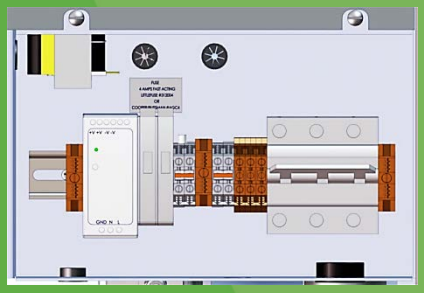

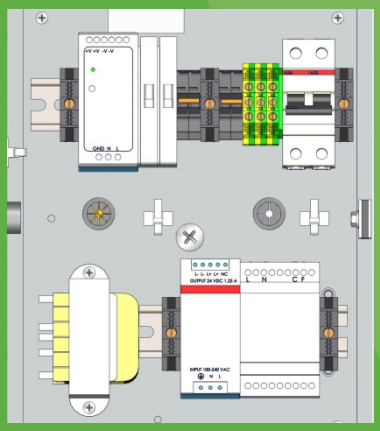

Other documents for this product include:

OMM-0115, GF-200 BMK 750-3000 Platinum Installation-Startup
OMM-0116, GF-201 BMK 750-3000 Platinum Operation-Maintenance
OMM-0117, GF-202 BMK 5000-6000 Platinum Installation -Startup
OMM-0118, GF-203 BMK 5000-6000 Platinum Operation-Maintenance
OMM-0121, GF-205 BMK 750-3000 Install-Startup
OMM-0122, GF-206 BMK 750-3000 Operation-Maintenance
OMM-0123, GF-207 BMK 5000-6000 Installation -Startup
OMM-0124, GF-208 BMK 5000-6000 Operation-Maintenance
OMM-0127, GF-205-K BMK 750K-3000K Installation-Startup KOREA
OMM-0128, GF-206-K BMK 750K-3000K Operation- Maintenance KOREA
OMM-0136, GF-210 BMK 750-6000 Platinum-Edge Installation-Startup
OMM-0137, GF-211 BMK 750-6000 Platinum-Edge Operation-Service
OMM-0138, GF-212 BMK 750-6000 Platinum-Edge Reference Manual

TAG-0019, GF-2070 Benchmark Boiler Application Guide
TAG-0022, GF-2050 Benchmark Vent & Combustion Air Guide
TAG-0047, GF-2030 Benchmark Gas Guide

Disclaimer

The information contained in this manual is subject to change without notice from AERCO International, Inc. AERCO makes no warranty of any kind with respect to this material, including, but not limited to, implied warranties of merchantability and fitness for a particular application. AERCO International is not liable for errors appearing in this manual, not for incidental or consequential damages occurring in connection with the furnishing, performance, or use of these materials.

GAS-FIRED c UL us LISTED

AHRI CERTIFIED www.ahridirectory. Commercial Boilers AHRI Standard BTS-2000

ASME H

Heating and Hot Water Solutions
AERCO International, Inc. • 100 Oritani Drive • Blauvelt, NY 10913
USA: T: (845) 580-8000 • Toll Free: (800) 526-0288 • AERCO.com
Technical Support • (800) 526-0288 • Mon-Fri, 8 am - 5 pm EST
© 2019 AERCO

1. General

Benchmark (BMK) Gas Fired Boilers are fully factory wired packaged units which require simple external power wiring as part of the installation (Figure 1). This technical guide is intended to help designers provide electrical power wiring (line voltage) to Benchmark units. Control wiring details are provided in other publications, depending upon unit application. This document is intended only as a guide and therefore cannot include all possible alternatives or unit applications. In order to comply with all codes and authorities having jurisdiction, designers and installers must plan the electrical wiring carefully and execute the installation completely. Emergency shutoffs, fusible fire switches, break glass stations, and other electrical requirements should be considered and installed whenever necessary.

2. Boiler Electrical Requirements

Benchmark boilers are available with the following power options:

BMK Model	Voltage	Phase	Amperage
BMK 750 – 1000 Domestic	120 V	1Ø / 60 Hz	15
BMK 750 – 1000 International	220 V	1Ø / 50-60 Hz	20
BMK 1500 – 2000 Domestic	120 V	1Ø / 60 Hz	20
BMK 1500 – 2000 International	220 V	1Ø / 50-60 Hz	20
BMK 2500 - 3000 Domestic	208 V	3Ø / 60 Hz	20
	460 V	3Ø / 60 Hz	15
BMK 2500 - 3000 International	380-415 V	3Ø / 50-60 Hz	15
BMK 5000 - 6000 Domestic	208 V	3Ø / 60 Hz	30
	460 V	3Ø / 60 Hz	20
BMK 5000 - 6000 Canada	575 V	3Ø / 60 Hz	15
BMK 5000 - 6000 International	380-415 V	3Ø / 50-60 Hz	15

Voltages lower than those specified in the table above will result in increased wear and premature failure of the blower motor. Wire size and type should be made per the National Electrical Code based on length and load.

For all Benchmark models, the power box for field wiring connections is located in the upper right corner behind the unit front panel. All copper wire must be connected to the power box.

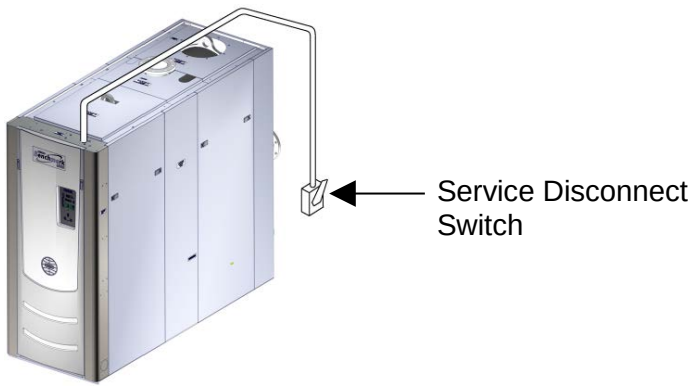

Figure 1: Service Disconnect Switch Typical Location

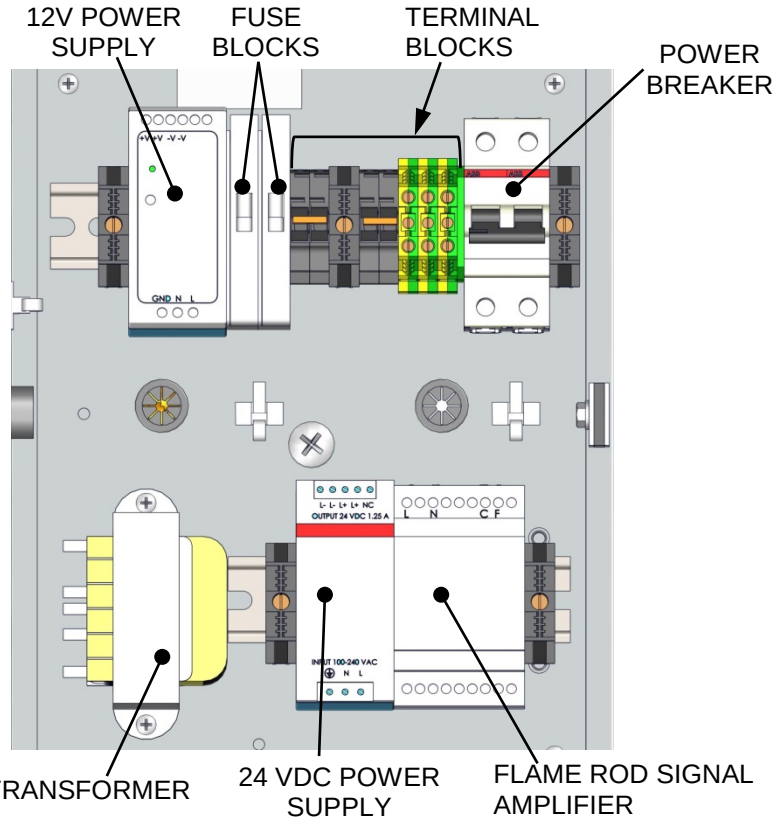

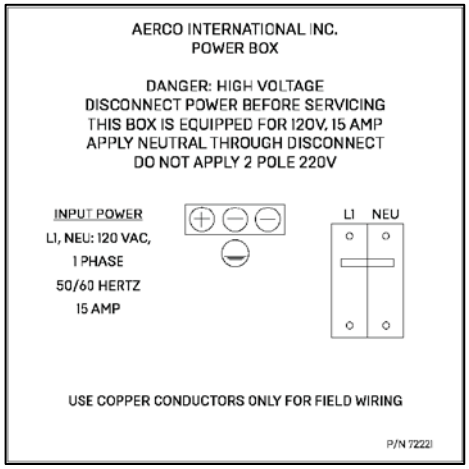

120 V Input Power
Power Box Label (P/N 72221)

Figure 2a: Power Box Components, BMK 750 & 1000 – DOMESTIC

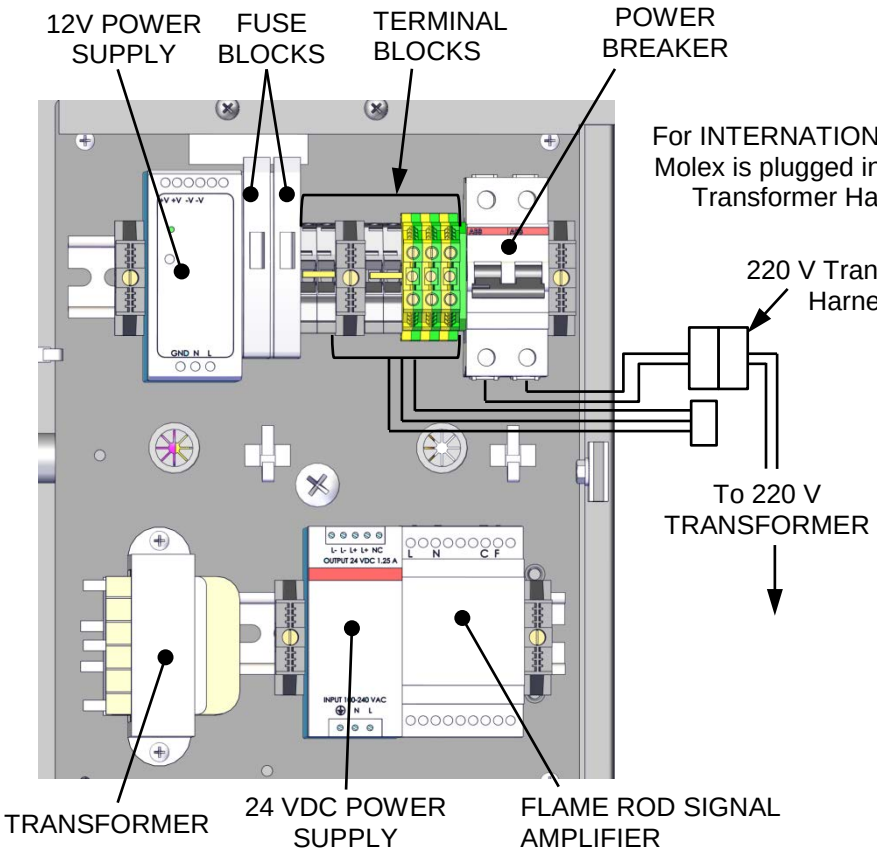

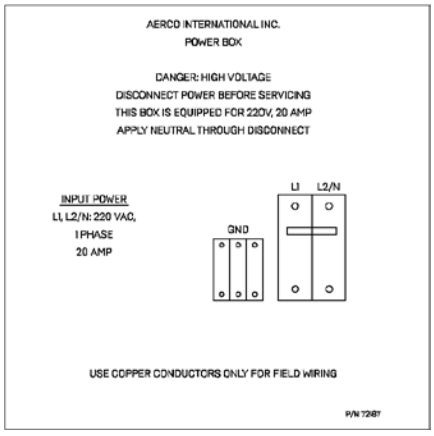

220 V Input Power
Power Box Label (P/N 72187)

Figure 2a: Power Box Components, BMK 750 & 1000 – INTERNATIONAL

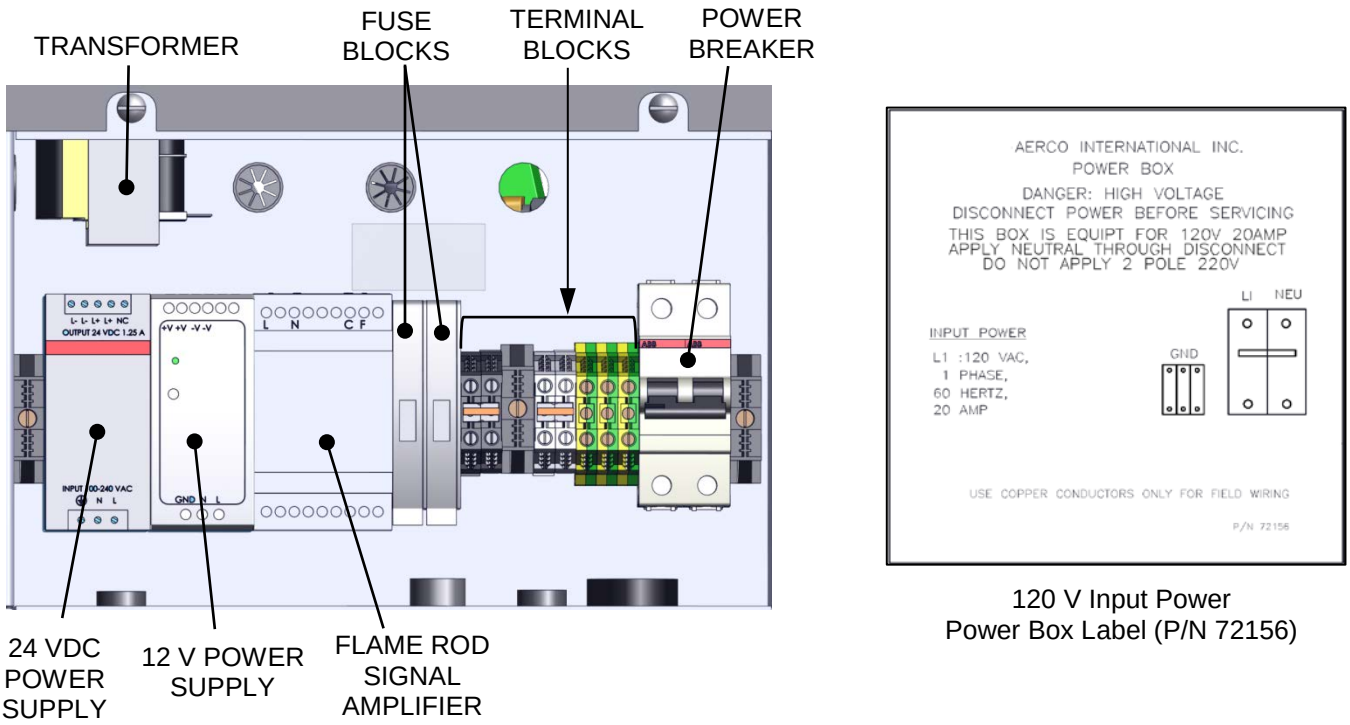

120 V Input Power
Power Box Label (P/N 72156)

Figure 3a: Power Box Components, BMK 1500 – 2000 – DOMESTIC

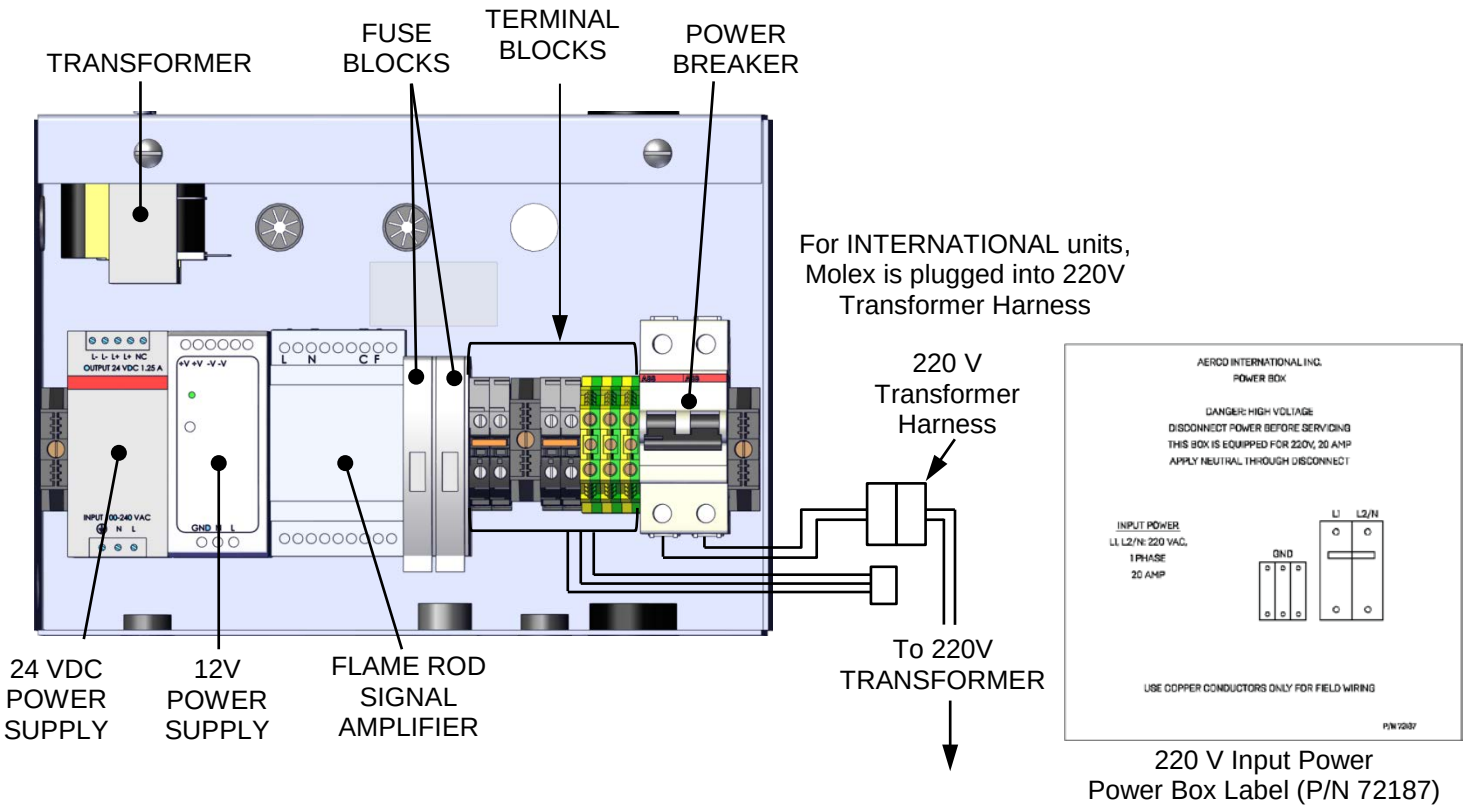

220 V Input Power
Power Box Label (P/N 72187)

Figure 3b: Power Box Components, BMK 1500 – 2000 – INTERNATIONAL

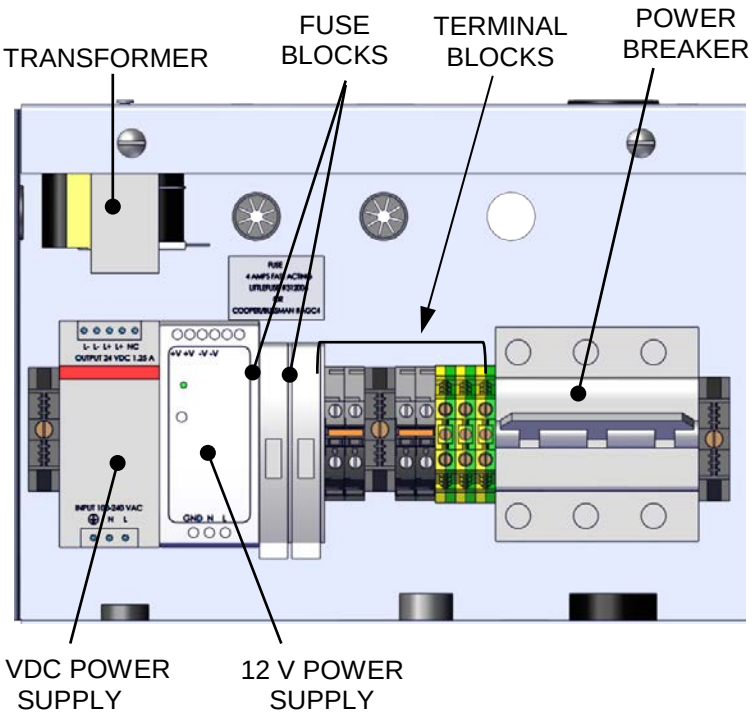

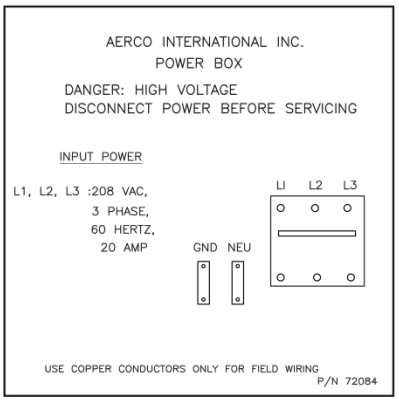

208 V Input Power (P/N 72084)

Benchmark 2500-3000 Power Box Labels

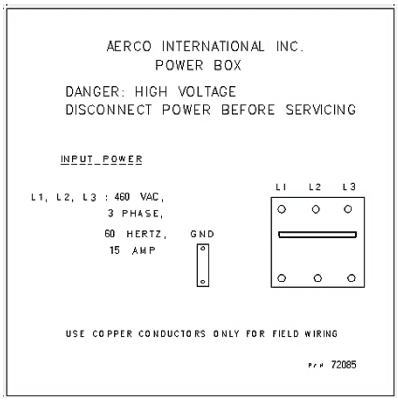

460 V Input Power (P/N 72085)

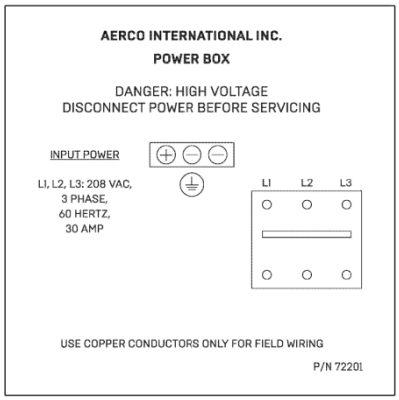

208 V Input Power (P/N 72201)

Benchmark 5000-6000 Power Box Labels

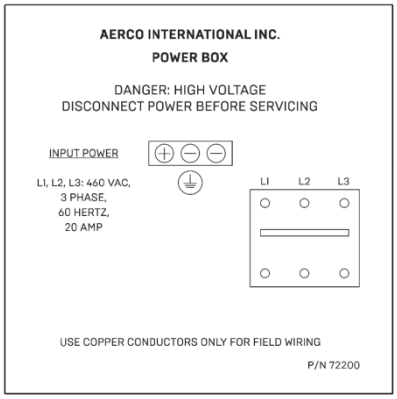

460 V Input Power (P/N 72200)

Figure 4a: Power Box Components, BMK 2500 – 6000 – DOMESTIC

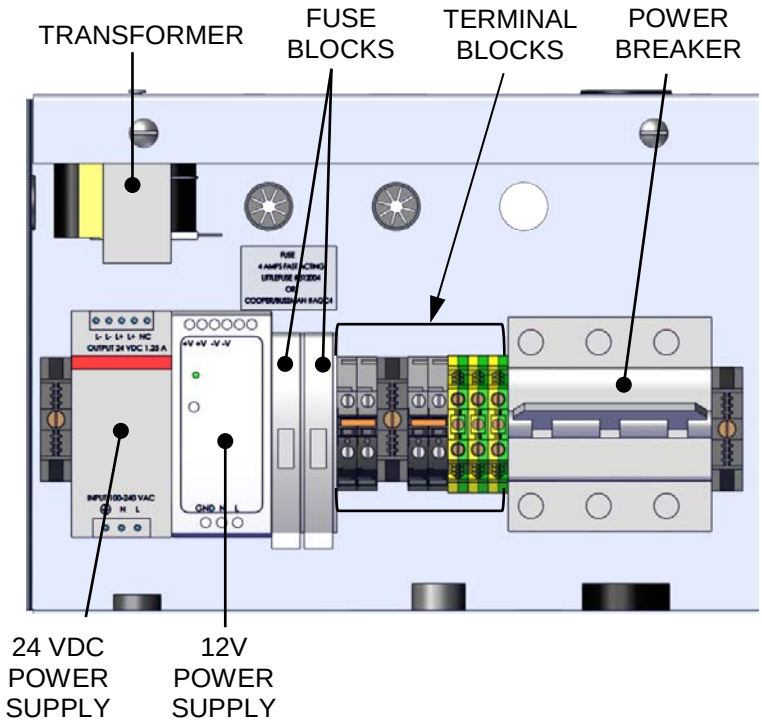

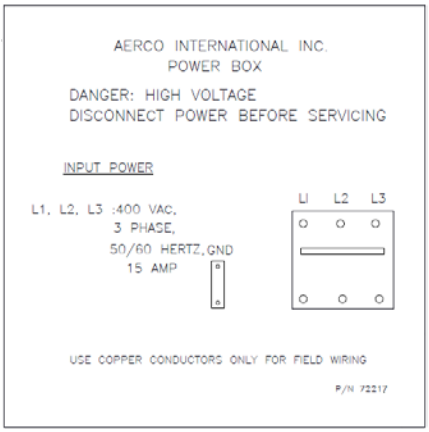

Power Box Label (P/N 72217)
380 to 415 V Input Power

Figure 4b: Power Box Components, BMK 2500 – 6000 – INTERNATIONAL

3. Provisions for Service

Designers must provide emergency shutoffs and other devices to satisfy electrical codes. It is also recommended to provide an electrical shutoff disconnect switch of suitable load carrying characteristics on or near each BMK boiler. No electrical boxes or field components should be mounted to the surface of the boiler or where they would interfere with the removal of the side or top panels for maintenance. The service disconnect switch should be mounted near the unit, as illustrated in Diagram 1. Wiring conduit, EMT, or other wiring paths should not be secured to the unit, but supported externally. Electricians should be instructed as to where the wiring conduit should be located, such as away from the relief valve discharge, drains, etc. All electrical conduit and hardware should be installed so that it does not interfere with the removal of any covers, inhibit service or maintenance, or prevent access between the unit and walls or another unit.

4. Boiler Wiring

A dedicated protected circuit should be provided from the power source to the boiler. No other electrical devices should be permanently wired on the same circuit. The protected circuit and circuit breaker switch must be sized for the amperage values below.

An emergency switch (electrical shutoff) must be in series with power to the unit.

	DOMESTIC UNITS				INTERNATIONAL UNITS			
BMK Model	**Diag.**	**Voltage/Phase/Frequency**	**Amps**	**Wires**	**Diag.**	**Voltage/Phase/Frequency**	**Amps**	**Wires**
750 – 1000	1a	120V / 1∅ / 60 Hz@	15 A	3	1b	220V / 1∅ / 50- 60 Hz	20 A	3
1500 – 2000			20 A					
2500/3000	2	208V / 3∅ / 60 Hz	20 A	5				
2500/3000	3a	460V / 3∅ / 60 Hz	15 A	4	3b	380-415V / 3∅ / 50- 60 Hz	15 A	4
5000/6000	4	208V-230 / 3∅ / 60 Hz	30 A	4				
5000/6000	5a	460V or 575V / 3∅ / 60 Hz	20 A	4	5b	380-415V / 3∅ / 50-60 Hz	15 A	4

For applicable wiring connections, refer to the schematic diagrams below.

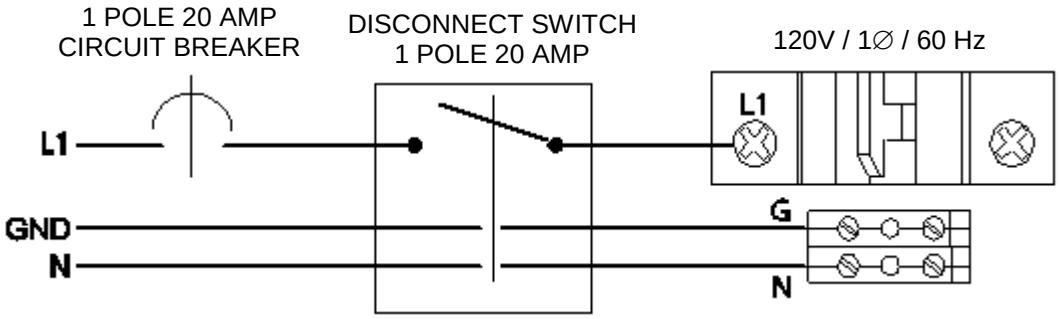

Diagram 1a - BMK 750 – 2000: 120V / 1∅ / 60 Hz Wiring Schematic – 3 Wire – DOMESTIC

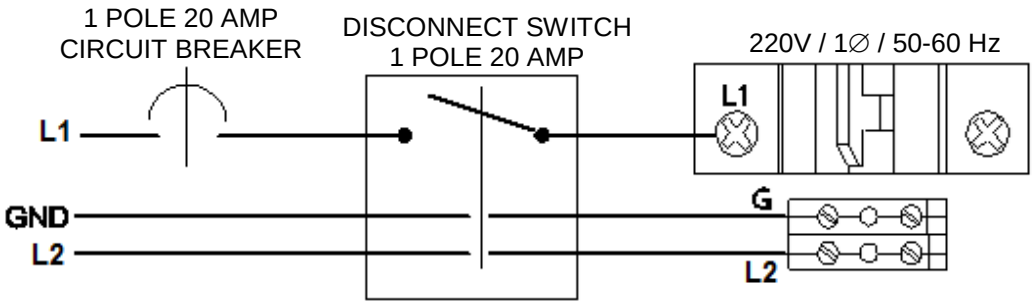

Diagram 1b - BMK 750 – 2000: 220V / 1∅ / 50-60 Hz Wiring Schematic – 3 Wire – INTERNATIONAL

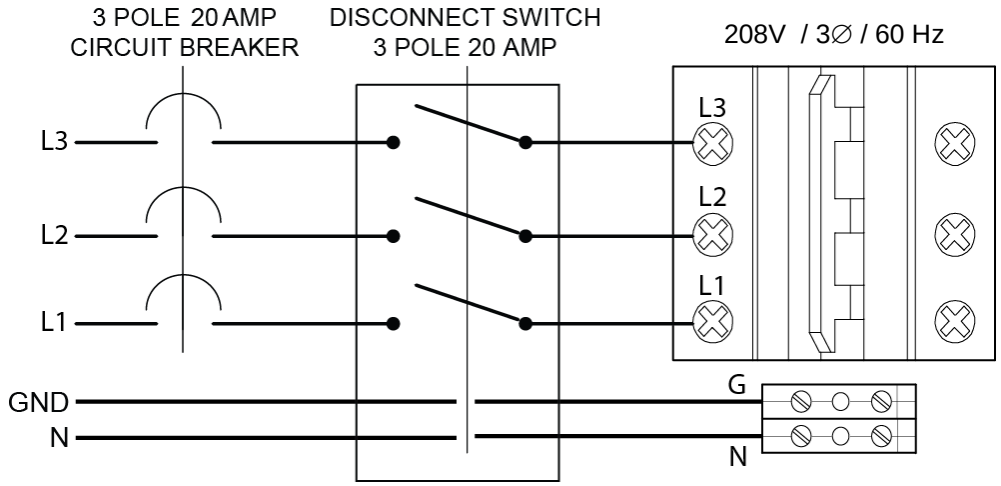

Diagram 2 - BMK 2500/3000: 208V / 3∅ / 60 Hz Wiring Schematic- 5 Wire – DOMESTIC

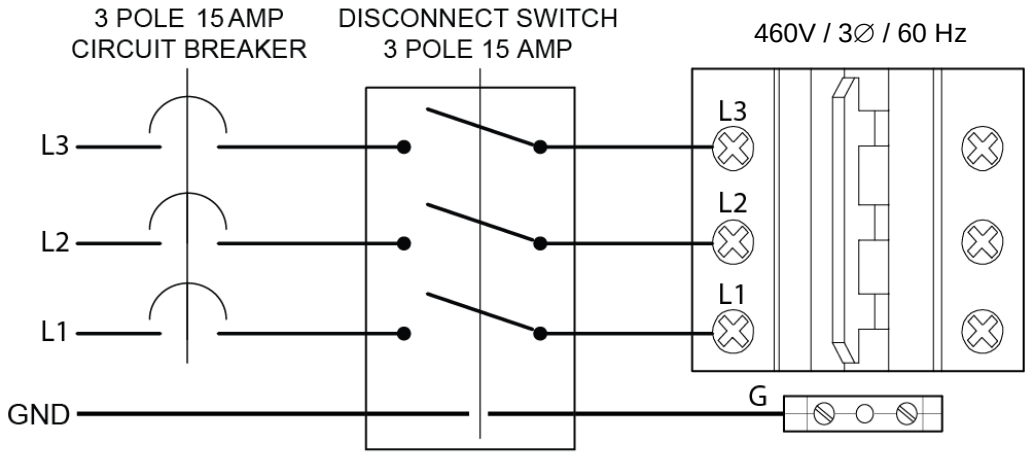

Diagram 3a - BMK 2500/3000: 460V / 3∅ / 60 Hz Wiring Schematic- 4 Wire – DOMESTIC

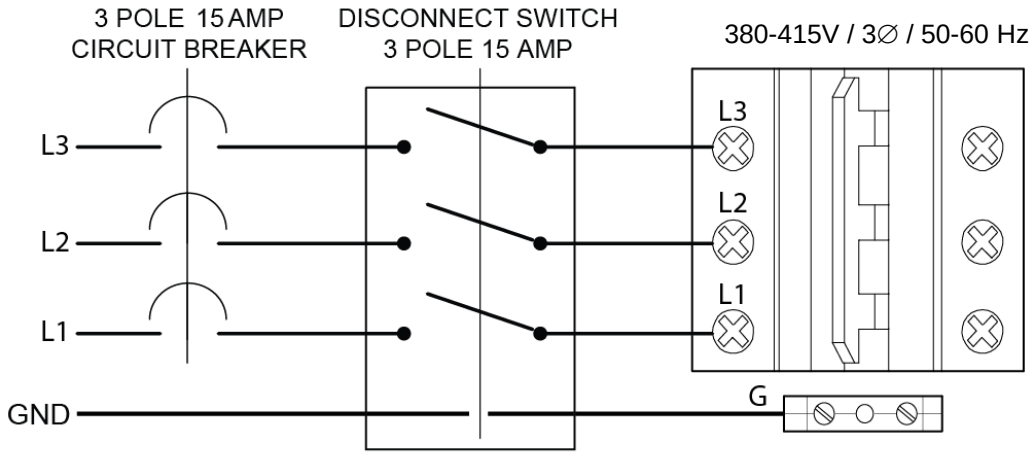

Diagram 3b- BMK 2500/3000: 380-415 / 3∅ / 50-60 Hz Wiring Schematic- 4 Wire – INTERNATIONAL

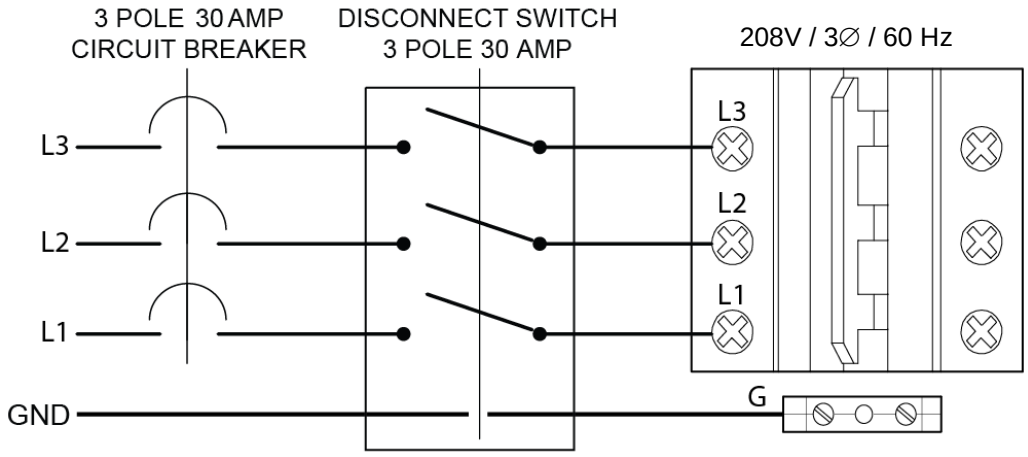

Diagram 4: BMK 5000/6000: 208V / 3∅ / 60 Hz Wiring Schematic- 4 Wire – DOMESTIC

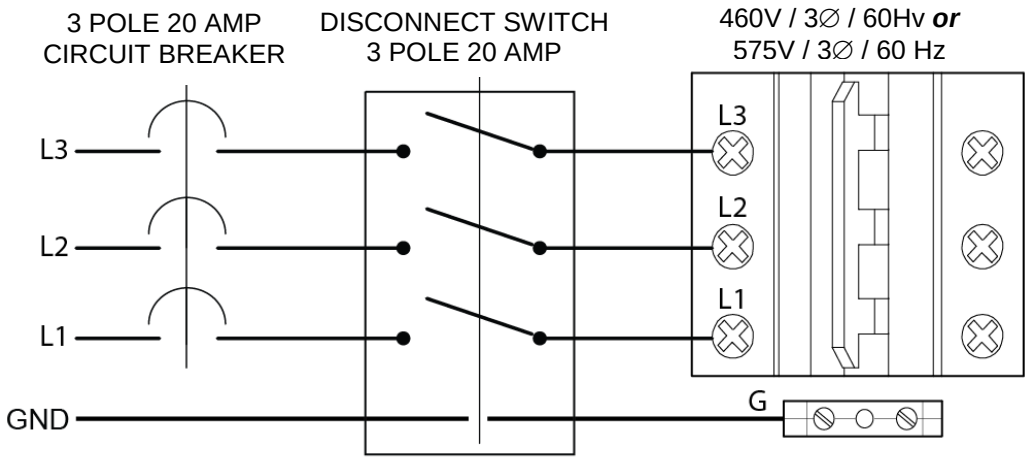

Diagram 5a: BMK 5000/6000: 460V or 575V / 3∅ / 60 Hz Wiring Schematic- 4 Wire – DOMESTIC

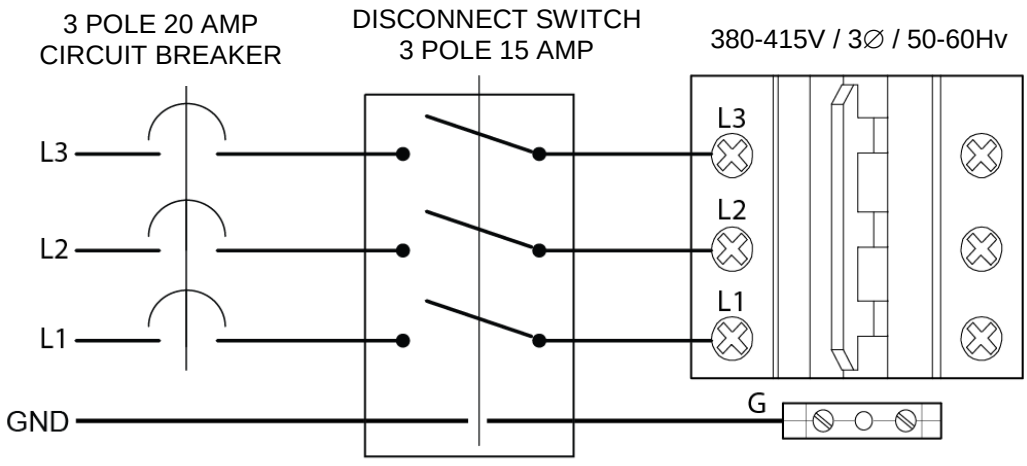

Diagram 5b: BMK 5000/6000: 380-415V / 3∅ / 50-60 Hz Wiring Schematic- 4 Wire – INTERNATIONAL

5. Multiple Unit Wiring

Whenever multiple units are installed within the same mechanical spaces, electrical code requirements call for a single electrical shutoff for emergency use. It is the responsibility of the electrical designer to comply with local codes and regulations affecting an individual installation.

Change Log:

Date	Description	Changed by
1/10/2019	**Rev K:** **DIR 18-60**: Added BMK 5000 to diagrams that apply to BMK 6000, reformatted per current design standard. **DIR 19-03**: Added “International” (380V) power option.	Chris Blair
5/31/2019	**Rev L:** **DIR 19-38**: Updated power requirements (internal ref PIR 1596)	Chris Blair

© AERCO International, Inc., 2019